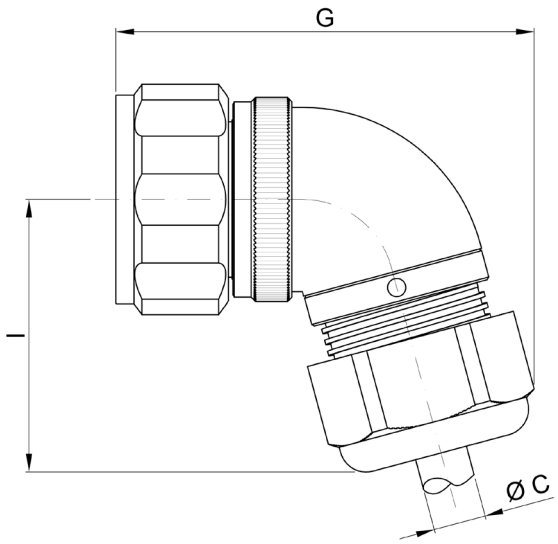

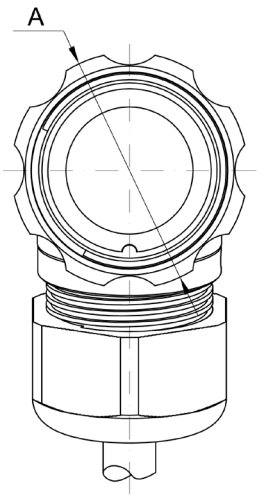

General dimensions	
G:	91mm
ØA:	52mm
I:	61mm
ØC:	14-25mm

Specifications:

Series:	92
Gender:	Plug/Male
Format:	Angled Plug
Connector size:	T30
Number of contacts:	7
Shell:	Aluminium alloy
Connector plating:	Black (2)
Coupling	Screwlock
Insulator:	Thermo-hard
Mating cycles:	500+
Adjustable cable gland:	D (14-25mm)
Ingress protection:	IP67 when mated

Resistant to saline atmosphere 600h ASTM B-117

Contacts:	Copper alloy
Contact plating:	Gold over nickel
Termination method:	Solder
Max wire section:	6 x 5.1mm² & 1 x 13mm²
Max contact resistance:	0.005Ω
Working voltage:	470V ac
Test voltage:	1.750V ac
Working current:	6 x 25A & 1 x 50A

Part Number: 92 08 37Y00 0 P D 2 0
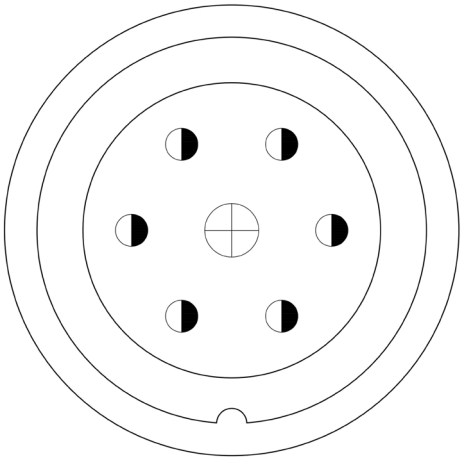
- Series: 92
- Type: Angled Plug
- Insulator planform: 37Y
- Polarisation: Standard
- Gender: Plug/Male
- Cable clamp: D (14-25mm)
- Finish: Black (non-conductive)
- Seal protection: Standard