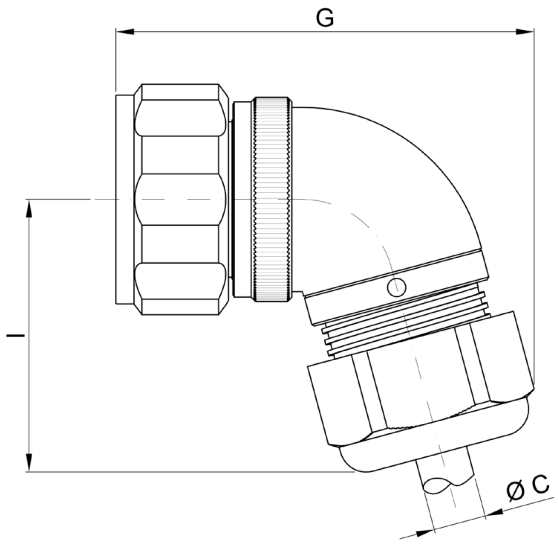

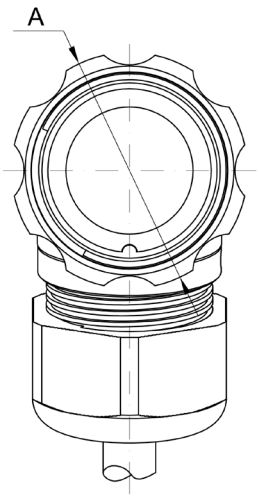

General dimensions	
G:	76mm
ØA:	36.5mm
I:	48mm
ØC:	6-12mm

Specifications:

Series:	92
Gender:	Plug/Male
Format:	Angled Plug
Connector size:	T20
Number of contacts:	13
Shell:	Aluminium alloy
Connector plating:	Black (2)
Coupling	Screwlock
Insulator:	Thermo-hard
Mating cycles:	500+
Adjustable cable gland:	A (6-12mm)
Ingress protection:	IP67 when mated

Resistant to saline atmosphere 600h ASTM B-117

Contacts:	Copper alloy
Contact plating:	Gold over nickel
Termination method:	Solder
Max wire section:	1.75 mm²
Max contact resistance:	0.005Ω
Working voltage:	270V ac
Test voltage:	1.050V ac
Working current:	13 x 10A

Part Number: 92 08 213AN 0 P A 2 0
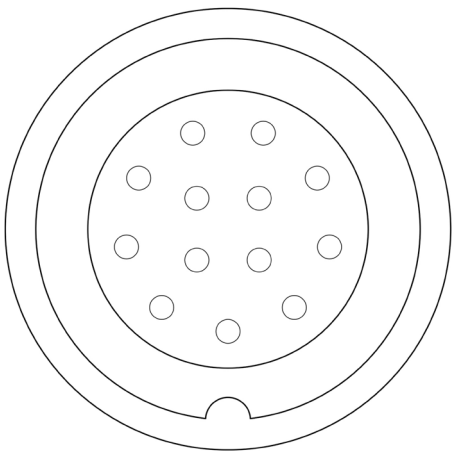
- Series: 92
- Type: Angled Plug
- Insulator planform: 213AN
- Polarisation: Standard
- Gender: Plug/Male
- Cable clamp: A (6-12mm)
- Finish: Black (non-conductive)
- Seal protection: Standard