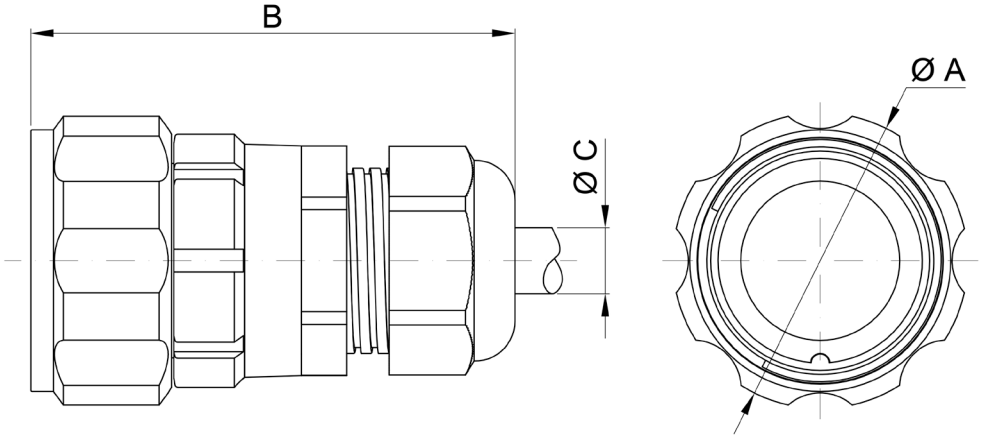

General dimensions	
B:	75.5mm
ØA:	36.5mm
ØC:	9-14mm

Specifications:

Series:	92
Gender:	Plug/Male
Format:	Straight Plug
Connector size:	T20
Number of contacts:	22
Shell:	Aluminium alloy
Connector plating:	Black (2)
Coupling	Screwlock
Insulator:	Neoprene
Mating cycles:	500+
Adjustable cable gland:	B (9-14mm)
Ingress protection:	IP67 when mated

Resistant to saline atmosphere 600h ASTM B-117

Contacts:	Copper alloy
Contact plating:	Gold over nickel
Termination method:	Solder
Max wire section:	0.75mm²
Max contact resistance:	0.005Ω
Working voltage:	150V ac
Test voltage:	1.050V ac
Working current:	22 x 7.5A

Part Number: 92 06 222P0 0 P B 2 0
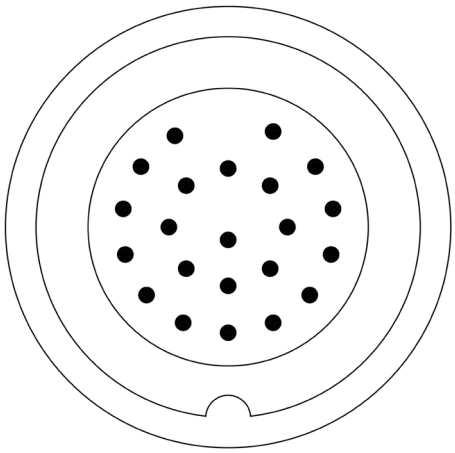
- Series: 92
- Type: Straight Plug
- Insulator planform: 222P
- Polarisation: Standard
- Gender: Plug/Male
- Cable clamp: B (9-14mm)
- Finish: Black (non-conductive)
- Seal protection: Standard