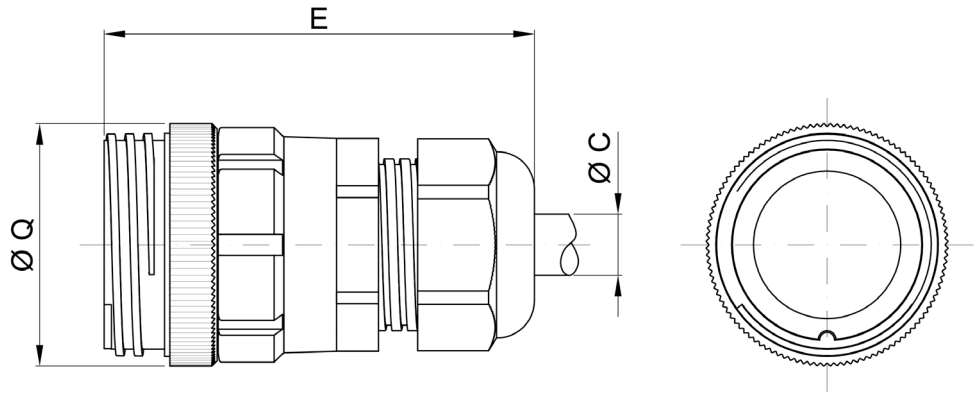

General dimensions	
E:	81mm
ØQ:	46mm
ØC:	7-15mm

Specifications:

Series:	92
Gender:	Socket/Male
Format:	Extender
Connector size:	T30
Number of contacts:	37
Shell:	Aluminium alloy
Connector plating:	Black (2)
Coupling	Screwlock
Insulator:	Thermo-hard
Mating cycles:	500+
Adjustable cable gland:	F (7-15mm)
Ingress protection:	IP67 when mated

Resistant to saline atmosphere 600h ASTM B-117

Contacts:	Copper alloy
Contact plating:	Gold over nickel
Termination method:	Solder
Max wire section:	0.75mm²
Max contact resistance:	0.005Ω
Working voltage:	175V ac
Test voltage:	2.100V ac
Working current:	37 x 7.5A

Part Number: 92 01 337P0 0 P F 2 0
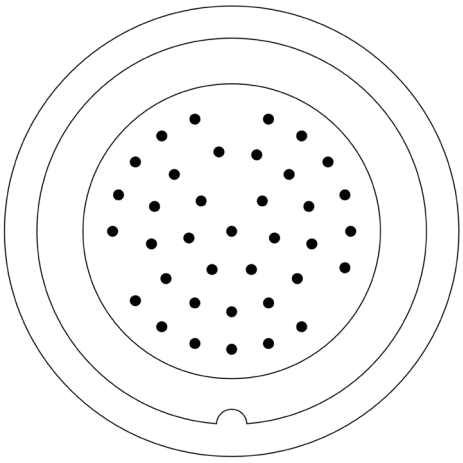
- Series: 92
- Type: Extender
- Insulator planform: 337P
- Polarisation: Standard
- Gender: Socket/Male
- Cable clamp: F (7-15mm)
- Finish: Black (non-conductive)
- Seal protection: Standard