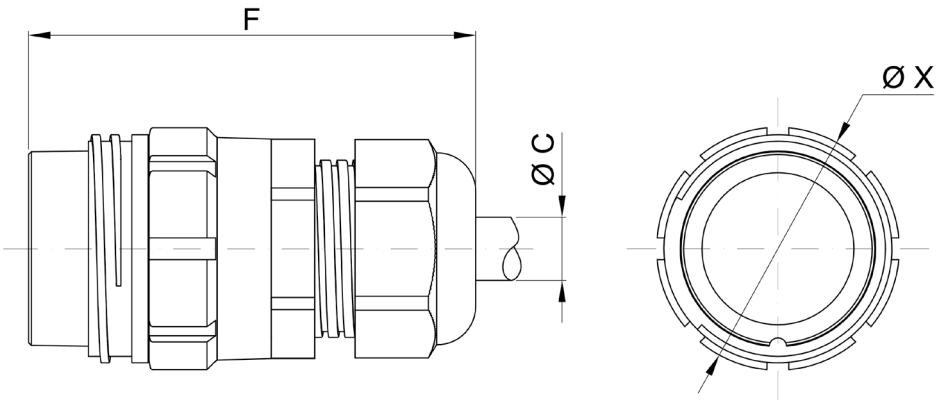

General dimensions	
F:	70.5mm
ØX:	29.8mm
ØC:	9-14mm

Specifications:

Series:	92
Gender:	Socket/Female
Format:	Extender
Connector size:	T20
Number of contacts:	5
Shell:	Aluminium alloy
Connector plating:	Black (2)
Coupling	Screwlock
Insulator:	Thermo-hard
Mating cycles:	500+
Adjustable cable gland:	B (9-14mm)
Ingress protection:	IP67 when mated

Resistant to saline atmosphere 600h ASTM B-117

Contacts:	Copper alloy
Contact plating:	Gold over nickel
Termination method:	Solder
Max wire section:	1.75 mm²
Max contact resistance:	0.005Ω
Working voltage:	370V ac
Test voltage:	1.400V ac
Working current:	5 x 10A

Part Number: 92 01 25S00 0 S B 2 0
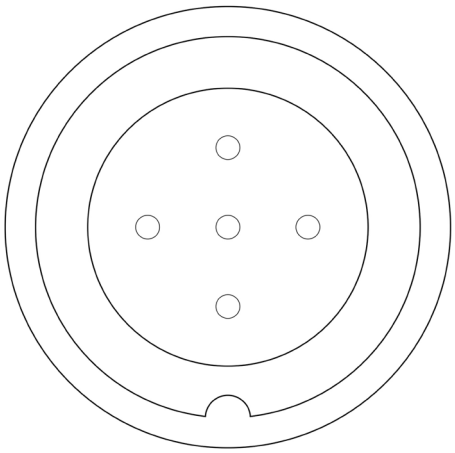
- Series: 92
- Type: Extender
- Insulator planform: 25S
- Polarisation: Standard
- Gender: Socket/Female
- Cable clamp: B (9-14mm)
- Finish: Black (non-conductive)
- Seal protection: Standard