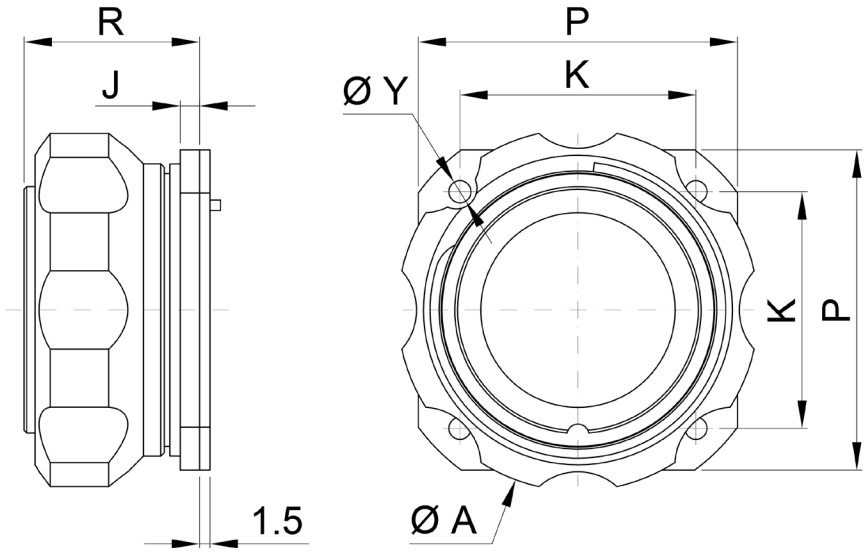

General dimensions	
ØA:	64.5mm
K:	41mm
P:	56mm
R:	25.3mm
ØY:	3.2mm
J:	2.8mm

Specifications:

Series:	92
Gender:	Plug/Female
Format:	Receptacle with Coupling Nut
Connector size:	T40
Number of contacts:	13
Shell:	Aluminium alloy
Connector plating:	Black (2)
Coupling	Screwlock
Insulator:	Thermo-hard
Mating cycles:	500+
Adjustable cable gland:	n/a
Ingress protection:	IP67 when mated

Resistant to saline atmosphere 600h ASTM B-117

Contacts:	Copper alloy
Contact plating:	Gold over nickel
Termination method:	Solder
Max wire section:	5.1mm²
Max contact resistance:	0.005Ω
Working voltage:	420V ac
Test voltage:	1.750V ac
Working current:	13 x 25A

Part Number: 92 09 413AB 0 S 0 2 0
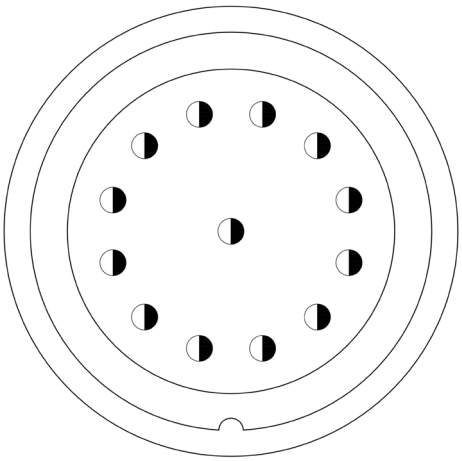
- Series: 92
- Type: Receptacle with C/N
- Insulator planform: 413AB
- Polarisation: Standard
- Gender: Plug/Female
- Cable clamp: n/a
- Finish: Black (non-conductive)
- Seal protection: Standard