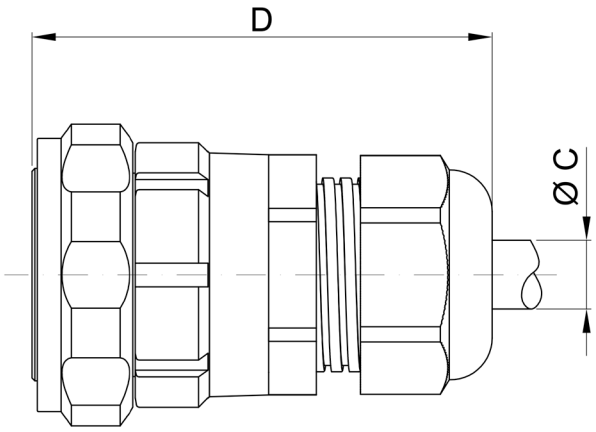

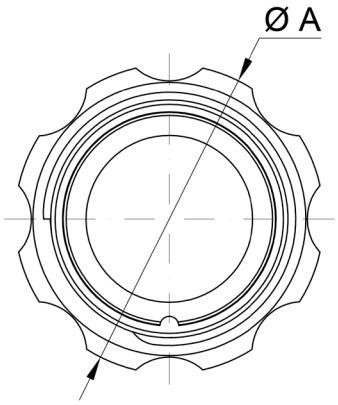

General dimensions	
D:	68mm
ØA:	36.5mm
ØC:	6-12mm

Specifications:

Series:	92
Gender:	Plug/Female
Format:	Straight Plug
Connector size:	T20
Number of contacts:	12
Shell:	Aluminium alloy
Connector plating:	Black (2)
Coupling	Screwlock
Insulator:	Thermo-hard
Mating cycles:	500+
Adjustable cable gland:	A (6-12mm)
Ingress protection:	IP67 when mated

Resistant to saline atmosphere 600h ASTM B-117

Contacts:	Copper alloy
Contact plating:	Gold over nickel
Termination method:	Solder
Max wire section:	1.75 mm²
Max contact resistance:	0.005Ω
Working voltage:	270V ac
Test voltage:	1.050V ac
Working current:	13 x 10A

Part Number: 92 06 212AF 0 S A 2 0
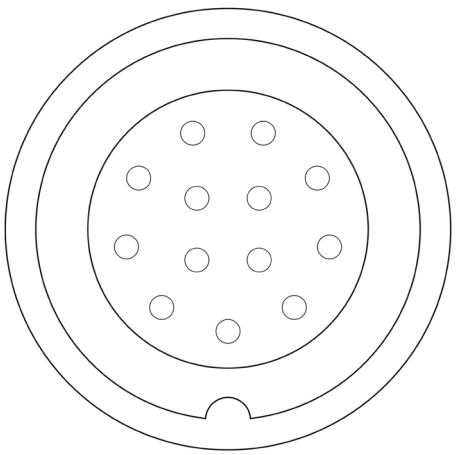
- Series: 92
- Type: Straight Plug
- Insulator planform: 212AF
- Polarisation: Standard
- Gender: Plug/Female
- Cable clamp: A (6-12mm)
- Finish: Black (non-conductive)
- Seal protection: Standard